AIAA JOURNAL
Vol. 50, No. 3, March 2012

Technical Notes

Single-Sensor Identification of Spinning Mode Noise from Aircraft Engine

Xun Huang*
Peking University, 100871 Beijing, People's Republic of China

DOI: 10.2514/1.J051508

Nomenclature

$\mathbf{A}$, $\mathbf{C}$	=	constant matrices in linear time-invariant system
a, b	=	any integers
B	=	number of blades
C_0	=	speed of sound, m/s
c	=	acoustic perturbation amplitude
f	=	frequency, Hz
i	=	complex part
J_m	=	mth Bessel function of the first kind
$\mathbf{K}$	=	gain of Kalman filter
k	=	spinning mode frequency, Hz
k_a	=	axial wave number, 1/m
k_r	=	radial wave number, 1/m
M_j	=	duct-flow Mach number
N	=	number of microphones in an array
nx	=	number of states
$\mathcal{O}$	=	observability matrix
$\mathbf{P}$	=	estimate covariance
p	=	flow pressure, Pa
t	=	time, s
u, v, w	=	velocity, m/s
V	=	the number of stator vanes
$\mathbf{v}$	=	measurement noise with covariance $\mathbf{R}$
$\mathbf{w}$	=	modeling noise with covariance $\mathbf{Q}$
w_t	=	$\partial w/\partial t$
x, r, θ	=	cylindrical coordinates
x_0, R	=	axial and radial positions of sensors
x	=	system states
y	=	system outputs
θ_K	=	circumferential position of Kth microphone, rad
ρ	=	flow density, kg/m^3

Subscripts

A_m	=	mth spinning mode of A
A_0	=	mean value of A

Superscripts

$\hat{A}$	=	approximation of A
A'	=	disturbance of A

Received 2 August 2011; revision received 6 October 2011; accepted for publication 10 October 2011.

*Associate Professor, Department of Aeronautics and Astronautics, College of Engineering; huangxun@pku.edu.cn. Senior Member AIAA.

I. Introduction

THE increasing popularity of air travel has drawn the attention of communities that live near airports to noise pollution. To address this environmental and social problem, silent aircraft has been recently extensively investigated to reduce environmental impacts [1]. Engine noise is an important noise component during the takeoff and approach to landing of aircraft. The development of high bypass ratio turbofan aircraft engines makes spinning mode noise to become the dominant noise source. The tonal spinning modes are mainly generated from the rotating fan and stator assembly [2]. Both the near-field noise imaging using beamforming [3–5] and the far-field fan noise estimation [6] have been conducted for isolated spinning mode. The accurate modal decomposition and detection are therefore quite important for the urgent development of silent aircraft.

A couple of measurement techniques have been recently proposed for in-duct circular microphone arrays [3,7]. The number of spinning modes propagating within the engine duct increases at high tonal noise frequency. As a result, the number of microphones should be as large as possible to accurately decompose spinning modes. Up to 100 sensors have been used in recent experiments for modal decomposition [8]. The whole testing system and experimental procedure are complicated to maintain the consistent and robust performance. In addition, the state of spinning modes instantaneously reflects the working condition of the rotating fan and stator assembly and thus can be used for monitoring engine health in real time. A simplified mode detection and decomposition method using a small number of microphones is therefore preferred. An advanced signal processing method was considered in this work. A new testing algorithm using a single sensor was proposed, which constitutes the main contribution of this paper.

II. Background

A. Motivation

The most dominant noise source of turbofan engine is the noise generated during the interaction between rotating fans and nearby stator vanes. The vortical flow in the rotor wakes impinges the stator surface, leading to the generation of noise, which mainly consists of tonal spinning modes. A beautiful manipulation using Fourier series has shown the relationship between the mth spinning mode and the number of stator vanes V and the number of rotating blades B [9],

$$m = aV + bB \tag{1}$$

where a is any integer and b denotes the bth harmonic of blade passing frequency. It is also possible to write the spinning modes at each frequency by a Fourier series in terms of azimuthal modes [2],

$$p'(x, r, \theta, t) = \sum_{n=-\infty}^{\infty} p'_n(x, r, t) e^{-in\theta} \tag{2}$$

It is straightforward that the mth azimuthal modal amplitude satisfies

$$\begin{aligned} p'_m(x, r, t) &= \frac{1}{2\pi}\int_0^{2\pi} \sum_{n=-\infty}^{\infty} p'_n(x, r, t) e^{-i(n-m)\theta}\,\mathrm{d}\theta \\ &= \frac{1}{2\pi}\int_0^{2\pi} p'(x, r, \theta, t) e^{im\theta}\,\mathrm{d}\theta \end{aligned} \tag{3}$$

The integral representation is approximately implemented in practical tests using a circular array with N equidistantly deployed sensors (see Fig. 1), that is

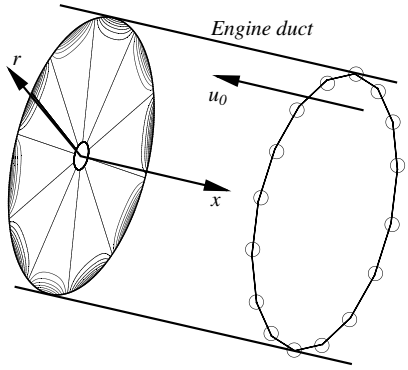

Fig. 1 Illustration of a spinning mode noise (downstream, $m = 5$) and the setup of an in-duct circular array with 16 sensors (upstream, denoted by ○).

$$p'_m(x_0, R, t) \approx \frac{1}{2\pi}\sum_{K=1}^{N}\left[p'(x_0, R, \theta_K, t)e^{im\theta_K}\frac{2\pi}{N}\right] = \frac{1}{N}\sum_{K=1}^{N} p'(x_0, R, \theta_K, t)e^{im\theta_K} \tag{4}$$

where $\theta_K = 2\pi K/N$ (for $K = 1, \ldots, N$), and x_0 and R are the axial and radial positions of sensors. The detectable azimuthal modes are in the range of $\lfloor -N/2 \rfloor$ to $\lfloor N/2 \rfloor$ from the Nyquist and Shannon sampling theorem.

A new method was developed in this work to detect spinning modes using a single sensor that could extensively save huge experimental effects. This new method also enables real-time monitoring [10] of rotor-stator acoustic status in harsh working conditions. In addition, the usage of only a few sensors imposes the minimum impact on engine mechanical structure and thus greatly simplifies the installation and maintenance procedure.

B. Preliminary knowledge

The theoretical background behind the proposed method is the Kalman filter [11] that estimates the amplitude of each spinning mode. The Kalman filter is briefly introduced below for the completeness of this paper. The essence of the Kalman filter is to estimate varying properties (spinning mode profiles for the case) of a system with the knowledge of its dynamic model and measurements (sound pressure for the case). A linear time-invariant (LTI) dynamic system can be described using the state space model

$$\frac{\mathrm{d}}{\mathrm{d}t}\mathbf{x}(t) = \mathbf{A}\mathbf{x}(t) + \mathbf{w}(t) \tag{5}$$

$$\mathbf{y}(t) = \mathbf{C}\mathbf{x}(t) + \mathbf{v}(t) \tag{6}$$

where t is time, $\mathbf{x}$ represents all states in the model, $\mathbf{y}$ denotes measurements, $\mathbf{A}$ and $\mathbf{C}$ are constant matrices, $\mathbf{w}$ is process (or modeling) noise, $\mathbf{v}$ is measurement noise, and $\mathbf{w}$ and $\mathbf{v}$ are presumably white noise with zero-mean normal distribution and covariance $\mathbf{Q}$ and $\mathbf{R}$, respectively; that is, $\mathbf{w}(t) \sim N(0, \mathbf{Q}(t))$ and $\mathbf{v}(t) \sim N(0, \mathbf{R}(t))$. The control input $\mathbf{u}(t)$ in a generic state space model is omitted in Eqs. (5) and (6).

A continuous time version of the Kalman filter can be constructed to estimate states $\mathbf{x}$ and the covariance of the estimation error. The filter consists of the following equations:

$$\frac{\mathrm{d}}{\mathrm{d}t}\hat{\mathbf{x}}(t) = \mathbf{A}\hat{\mathbf{x}}(t) + \mathbf{K}(t)(\mathbf{y}(t) - \mathbf{C}\hat{\mathbf{x}}(t)) \tag{7}$$

$$\mathbf{K}(t) = \mathbf{P}(t)\mathbf{C}^T(t)\mathbf{R}^{-1}(t) \tag{8}$$

$$\frac{\mathrm{d}}{\mathrm{d}t}\mathbf{P}(t) = \mathbf{A}\mathbf{P}(t) + \mathbf{P}(t)\mathbf{A}^T + \mathbf{Q}(t) - \mathbf{K}(t)\mathbf{R}(t)\mathbf{K}^T(t) \tag{9}$$

where the symbol ˆ denotes an estimation. The detailed theoretical background and developments of the above filter can be found in the literature [11] and numerous following papers [12].

III. Theoretical Development

A. Mathematical Model by Partial Differential Equations

A suitable mathematical model should be first constructed to apply the Kalman filter. Viscous dissipation and heat conduction are neglected for the studied sound propagation within a subsonic mean flow. The compressible Euler equations in cylindrical coordinates are used to model fluids around an axisymmetric duct, written in the conservative form as follows:

$$\begin{aligned}
&\frac{\partial\rho}{\partial t} + \frac{\partial(\rho u)}{\partial x} + \left(\frac{\partial}{\partial r} + \frac{1}{r}\right)(\rho v) + \frac{1}{r}\frac{\partial(\rho w)}{\partial\theta} = 0\\
&\frac{\partial\rho u}{\partial t} + \frac{\partial(\rho u^2)}{\partial x} + \left(\frac{\partial}{\partial r} + \frac{1}{r}\right)(\rho uv) + \frac{1}{r}\frac{\partial(\rho uw)}{\partial\theta} + \frac{\partial p}{\partial x} = 0\\
&\frac{\partial\rho v}{\partial t} + \frac{\partial(\rho uv)}{\partial x} + \left(\frac{\partial}{\partial r} + \frac{1}{r}\right)(\rho v^2) + \frac{1}{r}\frac{\partial(\rho vw)}{\partial\theta} + \frac{\partial p}{\partial r} = 0\\
&\frac{\partial\rho w}{\partial t} + \frac{\partial(\rho uw)}{\partial x} + \left(\frac{\partial}{\partial r} + \frac{1}{r}\right)(\rho vw) + \frac{1}{r}\frac{\partial(\rho w^2)}{\partial\theta} + \frac{1}{r}\frac{\partial p}{\partial\theta} = 0
\end{aligned} \tag{10}$$

where x is the axial coordinate, r is the radial coordinate, θ is the azimuthal angle, ρ is the density, p is the pressure, u is the axial velocity, v is the radial velocity, and w is the azimuthal velocity.

As the acoustic perturbations [p', ρ', and $\mathbf{u}' = (u', v', w')$] are small compared with the background mean flow variables [p_0, ρ_0, and $\mathbf{u}_0 = (u_0, v_0, w_0)$], sound wave propagation can be simply modeled by linearized Euler equations (LEE). For example, the momentum equation of the LEE in the vector form is

$$\frac{\partial\mathbf{u}'}{\partial t} + (\mathbf{u}_0.\nabla)\mathbf{u}' + (\mathbf{u}'.\nabla)\mathbf{u}_0 + \frac{\rho'}{\rho_0}(\mathbf{u}_0.\nabla)\mathbf{u}_0 = -\frac{1}{\rho_0}\nabla p' \tag{11}$$

To construct a state space model that is suitable for a single-sensor test case, the above three-dimensional equations have to be reduced to a two-dimensional version without the terms including $\partial/\partial\theta$. This simplification can be conducted as follows. First, it can be assumed that the acoustic disturbances are restricted to the blade-passing frequency and its harmonics. A Fourier series in terms of azimuthal modes m and frequency harmonics k can represent the acoustic disturbances,

$$p' = \sum_{m=-\infty}^{\infty} p'_m(x, r)e^{[i(kt-m\theta)]} \tag{12}$$

We can simply restrict pressure disturbance to a single mth azimuthal mode,

$$\begin{aligned}
w'_m(x, r, \theta, t) &= w'_m(x, r)e^{[i(kt-m\theta)]}\\
p'_m(x, r, \theta, t) &= p'_m(x, r)e^{[i(kt-m\theta)]}
\end{aligned} \tag{13}$$

Subsequently, two important relations for the circumferential velocity disturbance w' and the pressure disturbance p' can be achieved as

$$\frac{\partial w'_m}{\partial\theta} = -\frac{m}{k}\frac{\partial w'_m}{\partial t}, \qquad \frac{\partial^2 p'_m}{\partial t\partial\theta} = mkp'_m \tag{14}$$

As a result, the above three-dimensional LEE in the cylindrical coordinates can be simplified to a set of two-dimensional equations (the so-called 2.5D LEE [13]). For the uniform mean flow $(u_0, 0, 0)$ in the engine duct, the complete governing equations for a single mth azimuthal mode at a single frequency k are

$$\frac{\partial \rho'_m}{\partial t} + u_0 \frac{\partial \rho'_m}{\partial x} + \rho_0 \left(\frac{\partial u'_m}{\partial x} + \frac{\partial v'_m}{\partial r} + \frac{k v'_m - m w'_{tm}}{kr} \right) = 0$$
$$\frac{\partial u'_m}{\partial t} + u_0 \frac{\partial u'_m}{\partial x} + \frac{\partial p'_m}{\rho_0 \partial x} = 0, \qquad \frac{\partial v'_m}{\partial t} + u_0 \frac{\partial v'_m}{\partial x} + \frac{\partial p'_m}{\rho_0 \partial r} = 0$$
$$\frac{\partial w'_{tm}}{\partial t} + u_0 \frac{\partial w'_{tm}}{\partial x} + \frac{mk}{\rho_0 r} p'_m = 0 \tag{15}$$

where $w'_{tm} = \partial w'_m / \partial t$. All variables are nondimensionalized using a reference length, a reference speed, and a reference density. These equations are in the two-dimensional $(x - r)$ domain, and the solutions can be extended to the complete three-dimensional $(x - r - \theta)$ domain using Eq. (12). For the idealized geometry depicted in Fig. 1 (straight and semi-infinite unflanged duct), the solutions are

$$\rho'_m(x, r, \theta, t) = c J_m(k_r r) e^{i(kt - k_a x - m\theta)}$$
$$u'_m(x, r, \theta, t) = \frac{c k_a}{k - k_a M_j} J_m(k_r r) e^{i(kt - k_a x - m\theta)}$$
$$v'_m(x, r, \theta, t) = i \frac{c}{k - k_a M_j} \frac{\mathrm{d}[J_m(k_r r)]}{\mathrm{d}r} e^{i(kt - k_a x - m\theta)}$$
$$w'_{tm}(x, r, \theta, t) = i \frac{cmk}{r(k - k_a M_j)} J_m(k_r r) e^{i(kt - k_a x - m\theta)}$$
$$p'_m(x, r, \theta, t) = c J_m(k_r r) e^{i(kt - k_a x - m\theta)} \tag{16}$$

where $M_j = u_0 / C_0$, C_0 is the speed of sound, c is the amplitude of the acoustic perturbation (the nondimensional value is normally less than 10^{-3}), and J_m is the mth-order Bessel function of the first kind. The nth radial wave number k_r of the mth spinning mode is the nth solution of the following equation determined by the hard-wall boundary conditions of the duct:

$$\frac{\mathrm{d}[J_m(Rk_r)]}{\mathrm{d}r} = 0 \tag{17}$$

The axial wave number k_a of the mth mode can be subsequently calculated using

$$k_a = \frac{k}{1 - M_j^2} \left(-M_j \pm \sqrt{1 - \frac{k_r^2 (1 - M_j^2)}{k^2}} \right) \tag{18}$$

The choice of $\pm$ in Eq. (18) is determined by the direction of the spinning wave.

B. Simplified State Space Model

The previous mathematical manipulations have simplified three-dimensional partial differential equations to two-dimensional partial differential equations, which enables the use of a single sensor. All spatially differential terms in Eq. (15) should be further replaced to construct state space equations of the form of Eq. (5). The spectral method can be used to manipulate partial differential terms, i.e., the terms of $\partial / \partial x$ in Eq. (15) can be replaced by $-ik_a$. This technique helps to reformulate partial differential equations in flow dynamics to ordinary differential equations in control. It is still difficult to reduce the term of $\partial v' / \partial r$, which is therefore regarded as process error $\mathbf{w}$ in the state model for the mth spinning mode

$$\underbrace{\frac{\mathrm{d}}{\mathrm{d}t} \begin{bmatrix} \rho'_m \\ u'_m \\ v'_m \\ w'_{tm} \end{bmatrix}}_{\mathrm{d}\mathbf{x}(t)/\mathrm{d}t} = \underbrace{\begin{bmatrix} ik_a u_0 & ik_a \rho_0 & -\rho_0 / r & \rho_0 m / kr \\ ik_a / \rho_0 & ik_a u_0 & 0 & 0 \\ 0 & 0 & ik_a u_0 & 0 \\ -mk / \rho_0 r & 0 & 0 & ik_a u_0 \end{bmatrix}}_{A} \underbrace{\begin{bmatrix} \rho'_m \\ u'_m \\ v'_m \\ w'_{tm} \end{bmatrix}}_{x(t)} + \underbrace{\begin{bmatrix} \rho_0 \partial v'_m / \partial r \\ 0 \\ 0 \\ 0 \end{bmatrix}}_{w(t)} \tag{19}$$

The process error $\mathbf{w}$ should also include other modeling errors. It is also worthwhile to point out that Eq. (19) is prepared for the microphone that is surface mounted on the hard wall of the duct, where v'_m and $\partial p'_m / \partial r$ equal 0.

According to Eq. (2), the output equation of the state space model is

$$p' = \sum_{l=-\infty}^{\infty} p'_l(x, r, t) e^{-il\theta} = p'_m + \sum_{l=-\infty, l \neq m}^{\infty} p'_l(x, r, t) e^{-il\theta}$$
$$= \underbrace{[1 \quad 0 \quad 0 \quad 0]}_{C} \underbrace{\begin{bmatrix} \rho'_m \\ u'_m \\ v'_m \\ w'_{tm} \end{bmatrix}}_{x(t)} + \underbrace{\sum_{l=-\infty, l \neq m}^{\infty} \rho'_l(x, r, t) e^{-il\theta}}_{v(t)} \tag{20}$$

where the nondimensional ρ'_m equals p'_m. The measurement error $\mathbf{v}$ mainly represents interferences from other spinning modes. The self-noise from the sensor can be included in $\mathbf{v}$ as well.

Given Eqs. (19) and (20), an observability matrix can be constructed:

$$\mathcal{O} = \begin{bmatrix} C \\ CA \\ \vdots \\ CA^{nx-1} \end{bmatrix} \tag{21}$$

where nx is the number of states x; it is four for the case. From linear control theory, the system [Eqs. (19) and (20)] is observable if and only if the rank of $\mathcal{O}$ equals nx. In other words, the states x can be determined only using the measurement outputs if the system is observable. Once the system is observable, a Kalman filter [Eqs. (7–9)] can be designed to approximate the spinning mode of interest.

C. Implementation

The purpose of the method developed here is to extract any single spinning mode information from sensor measurements over time, containing noise and interference from other spinning modes. A dynamic model for the spinning mode of interest can be constructed using above equations [Eqs. (19) and (20)]. Potential spinning modes can be calculated using Eq. (1), given the blade rotating frequency, the vane number V, and the blade number B. The related radial wave number k_r and axial wave number k_a can be computed using Eqs. (17) and (18), respectively. The coefficient matrices can be constructed and the observability of the LTI system can be examined by checking the rank of the observability matrix [Eq. (21)]. It is easy to see that the linear system [Eqs. (19) and (20)] is observable for most generic cases (with $u_0 \neq 0$). The Kalman filter can be designed and conducted to estimate spinning modes based on the real-time measurements from the single sensor. All the preceding formulations are prepared for a continuous time system. It should be noticed that the discrete form of the Kalman filter [14] has to be considered for practical cases with sampling time step δt. For example, the discrete

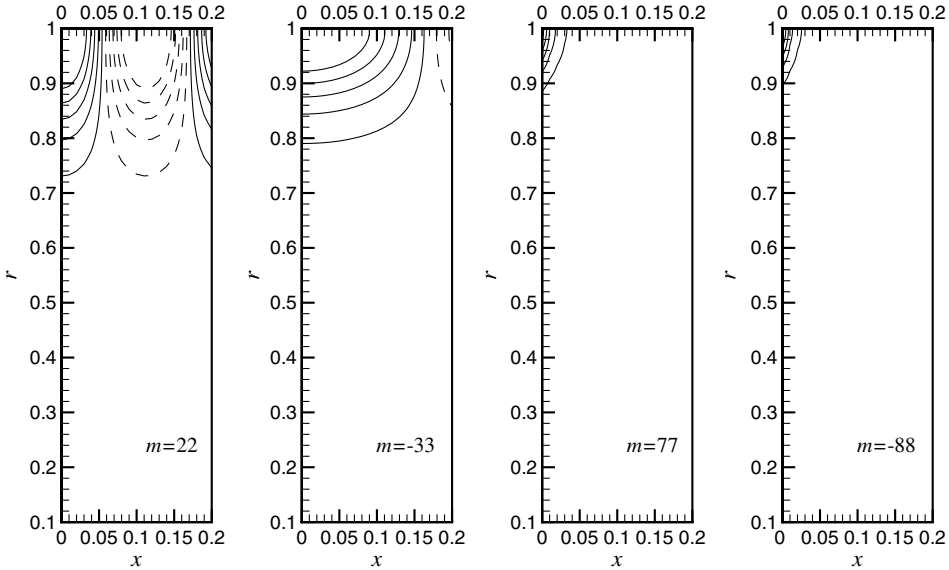

Fig. 2 The spinning modes propagating in the turbofan engine duct, where $\theta = 0$ and $M_j = 0.2$.

counterpart of A is $e^{A\delta t}$. More details of discrete linear system and its Kalman filter are omitted here for brevity.

IV. Results and Discussion

The attention of this paper is mainly focused on theoretical development. Some primitive numerical simulation results are given here to demonstrate the new method. The following configuration can be found for a practical turbofan engine, where the number of rotor blades is $B = 22$ and the number of stator vanes is $V = 55$. The resulted spinning modes for the first harmonic of the blade passing frequency are $m = \ldots -88, -33, 22, 77 \ldots$, according to Eq. (1). The nth radial wave number and the axial wave number for each mth spinning mode can be calculated using Eqs. (17) and (18), e.g., $k_r(m,n)|_{m=-33,n=1} = 35.8$, $k_a(m,n)|_{m=-33,n=1} = -1.54 - 35.7i$, where M_j is set to 0.2 for approaching stage, the blade passing frequency f is 400 Hz, and thus the nondimensional $k = 7.39$ ($k = 2\pi f/C_0$). The sound propagation at $\theta = 0$ deg in a straightened engine duct (the radius $R = 1$) is shown in Fig. 2 for each mth mode, respectively. The spinning mode sound source is at $x = 0$ and propagates to the intake lip ($x = 0.3$ m). The sensor is surface mounted at $x = 0.1$, $R = 1$, $\theta = 0$. The details of the numerical computation can be found in the literature [13]. It can be seen that the two modes $m = -88, 77$ are quickly attenuated in the duct. Other modes of higher absolute values are also cut off for the given frequency. As a result, only the two spinning modes $m = 22$ and $m = -33$ are considered in the simulation. In addition, the measurements are polluted by self-noise of sensors and facility background noise. A suitable value has been assigned to the covariance of $v(t)$ to take this pollution into account.

The simulation results in the time domain are shown in Fig. 3. A circular array with 100 equidistant sensors is virtually placed at ($x = 0.1$, $R = 1$). The measurements reflect the combinational results of the pollution noise, the 22nd and the -33rd spinning modes. It can be seen that the array results using Eq. (4) for $m = 22$ satisfactorily approaches the analytical solution. In other words, the array with 100 microphones successfully extracts the single spinning mode from measurements over time, combing two different azimuthal modes.

If we reduce the microphone number to one, the measurements for the 22nd mode are negatively affected by the -33rd spinning mode as well as various background and facility noise. The measurements of the single sensor largely deviate from the analytical solution. In contrast, the proposed method based on the Kalman filter greatly improves the single-sensor test performance. The difference between the filtering results and the analytical solutions is reduced by at least

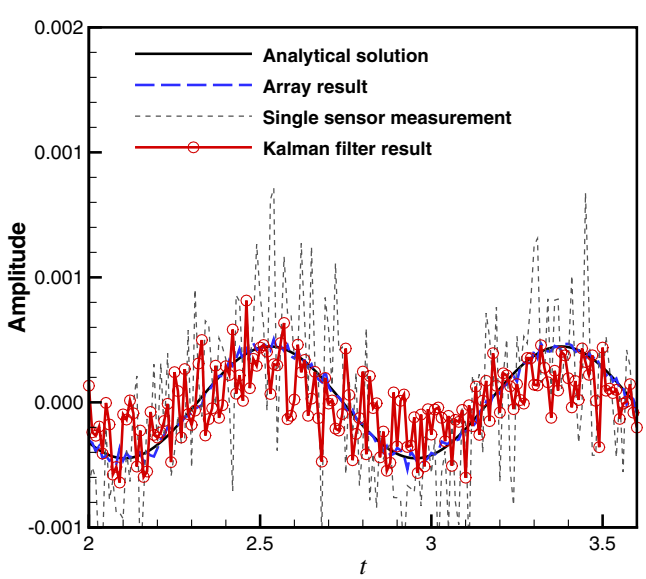

Fig. 3 The results of the 22nd mode in the time domain.

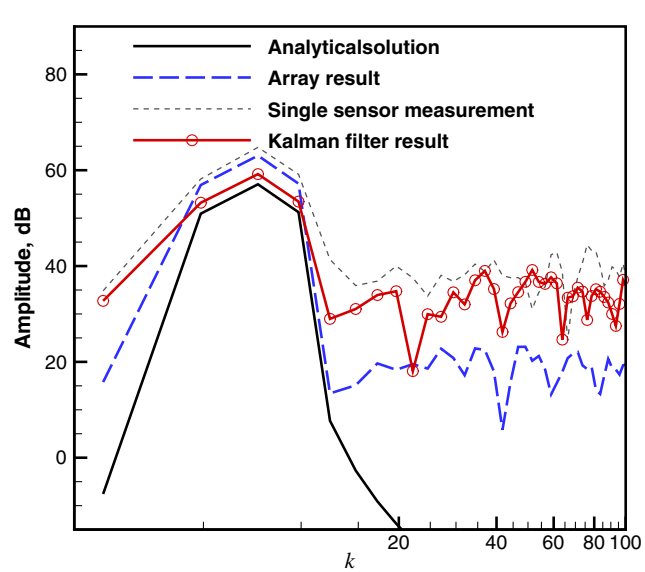

Fig. 4 The results of the 22nd mode in the frequency domain.

50%, given the model for the spinning mode of interest (which is 22 for the test case) as well as statistical information of **w** and **v**.

The spectral results are compared in Fig. 4. It can be seen that the single-sensor measurements are polluted at higher frequency ranges. The Kalman filter-based method can be applied to reduce the noise by approximately 5 dB at most high frequency ranges. The best outcome is achieved by the circular array, which can attenuate the noise by almost 20 dB beyond $k = 20$. The price to pay for the good performance is the complicated maintenance of 100 sensors. In contrast, the Kalman filter-based method proposed here can generate an acceptable performance simply using one sensor. This new method thus achieves a good compromise between the performance and the experimental costs.

A similar state model can be constructed for the $m = -33$ case and the same filtering process can be conducted. In addition, for simplicity, only the first radial modes are considered in the simulation (see Fig. 3). A model can be constructed for second radial modes in the same way [using Eqs. (17–20)]. The proposed method still applies. Similar findings have been discovered and results are omitted for brevity. It should be noted that a good estimation depends on the reasonable choices of the noise covariance matrices $\mathbf{Q}$ and $\mathbf{R}$, which can be estimated from experimental data in realistic tests. Higher radial modes are rapidly damped for the chosen frequency. We should admit that much more spinning modes, having various azimuthal, radial modes, and frequencies, could propagate in an engine duct for a practical engine case. Moreover, the duct wall of an aeroengine is rarely straight but has a small curvature. Extensive research is still being done in our group to resolve these practical issues.

V. Summary

Spinning modal decomposition and detection of an aeroengine are quite important for the urgent development of silent aircraft. An in-duct circular microphone array has to be used for the existing measurement techniques. To accurately decompose high spinning modes, the number of microphones should be as many as possible, which is, however, quite inconvenient for practical tests. In this work, a new testing algorithm that only needs a single sensor is developed, which constitutes the main contribution of this paper. The fundamental idea behind the testing method is the Kalman filter that was originally developed for ordinary differential equations. The three-dimensional partial differential equations describing spinning modes propagation was therefore simplified to the two-dimensional ordinary differential equations in this work. Although the main attention of this paper is focused on theoretical development, some primitive results of numerical simulations were given to demonstrate the proposed new method. In summary, this Kalman filter based new method is believed to hold great potential in both scaled model tests and practical engine health monitoring.

Acknowledgments

The majority of this research was supported by the NSF Grant of China (grants 11172007, 90916003, and 11150110134).

References

[1] Dowling, A. P., and Hynes, T., "Towards a Silent Aircraft," *The Aeronautical Journal*, Vol. 110, No. 8, 2006, pp. 487–494.

[2] Homicz, G. F., and Lordi, J. A., "A Note on the Radiative Directivity Patterns of Duct Acoustic Modes," *Journal of Sound and Vibration*, Vol. 41, No. 3, 1975, pp. 283–290. doi:10.1016/S0022-460X(75)80175-1

[3] Sijtsma, P., "Feasibility of In-Duct Beamforming," AIAA Paper 2007–3696, 2007.

[4] Huang, X., Vinogradov, I., Bai, L., and Ji, J. C., "An Observer for Phased Microphone Array Signal Processing with Nonlinear Output," *AIAA Journal*, Vol. 48, No. 11, 2010, pp. 2702–2705.

[5] Huang, X., "Real-Time Location of Coherent Sound Sources by the Observer-Based Array Algorithm," *Measurement Science and Technology*, Vol. 22, No. 4, 2011, pp. (065501)1–9.

[6] Munt, R. M., "The Interaction of Sound with a Subsonic Jet Issuing from a Semi-infinite Cylindrical Pipe," *Journal of Fluid Mechanics*, Vol. 83, 1977, pp. 609–640. doi:10.1017/S0022112077001384

[7] Lowis, C. R., Joseph, P. F., and Kempton, A. J., "Estimation of the Far-Field Directivity of Broadband Aeroengine Fan Noise Using an In-Duct Axial Microphone Array," *Journal of Sound and Vibration*, Vol. 329, No. 19, 2010, pp. 3940–3957. doi:10.1016/j.jsv.2010.03.021

[8] Sijtsma, P., and Zillmann, J., "In-Duct and Far-Field Mode Detection Techniques," AIAA Paper 2007–3439, 2007.

[9] Tyler, J. M., and Sofrin, T. G., "Axial Flow Compressor Noise Studies," *SAE Transactions*, Vol. 70, 1962, pp. 309–332.

[10] Huang, X., "Real-Time Algorithm for Acoustic Imaging with a Microphone Array," *Journal of Acoustical Society of America*, Vol. 125, No. 5, 2009, pp. EL190–EL195.

[11] Kalman, R. E., "A New Approach to Linear Filtering and Prediction Problems," *Journal of Basic Engineering*, Vol. 82, No. 1, 1960, pp. 35–45. doi:10.1115/1.3662552

[12] Psiaki, M., "Kalman Filtering and Smoothing to Estimate Real-Valued States and Integer Constants," *Journal of Guidance, Control, and Dynamics*, Vol. 33, No. 5, 2010, pp. 1404–1417. doi:10.2514/1.48567

[13] Zhang, X., Chen, X. X., Morfey, C. L., and Nelson, P. A., "Computation of Spinning Modal Radiation from an Unflanged Duct," *AIAA Journal*, Vol. 42, No. 9, 2004, pp. 1795–1801. doi:10.2514/1.890

[14] Bageshwar, V., Gebre-Egziabher, D., Garrard, W., and Georgiou, T., "Stochastic Observability Test for Discrete-Time Kalman Filters," *Journal of Guidance, Control, and Dynamics*, Vol. 32, No. 4, 2009, pp. 1356–1370. doi:10.2514/1.38128

C. Bailly
Associate Editor